REMEDI

REMEX-KAG

MEDICAL IMAGE SOLUTION

Medical Portable X-ray Camera Image Solution

2020 2021

MI

REMEX-KAG

REMEX-KA6

HANDHELD X-RAY CAMERA with EXCULUSIVELY DESIGNED ACCESSORIES

Superior Image Quality with
Low Radiation Exposure

NEW 2020 2021

REMEX-KAG

REMEX Main Features

Product Advantages

REMEX Main Features

- **Expanded Clinical Coverage**
  - All parts of human body including adult chest, pelvis, abdomen, hands, feet and oral parts
  - Set up time under 1 minute.
- **Minimized Radiation Exposure /Reduced Time**
  - Reduced radiation exposure time with low dose product design and mechanism minimized radiation exposure for users and patients
  - Image acquisition under 3 seconds.
- **Patented Adjustable active area collimator**
  - Patented Collimator reduces leakage and scatter radiation
- **Superior Quality X-ray Image**
  - 70kV: Improved image penetration >Improved bone identification
  - 6mA: Reduced required irradiation time >Reduced motion blurring
  - 0.4mm Focal Spot>High resolution
- **LED and Laser Guided Beam Function**
  - Helps users to pinpoint accurate exposure area

Low Dose

Light Weight

High Resolution

Wireless Remote Switch

REMEX Main Features

70kV

- Improved image penetration

> Improved bone identification

6mA

- Reduced required irradiation time

> Reduced motion blurring

0.4mm

- Focal Spot

> High resolution

REMEX-KAG

REMEX Application

Tablet/Mobile Application

- Wireless Connectivity with tablet and mobile phone
- Wireless X-ray exposure switch adjustable seconds, kV, mA

Wireless Remote Switch

REMEX Main Features

Intended Use

· REMEX Image Gallery

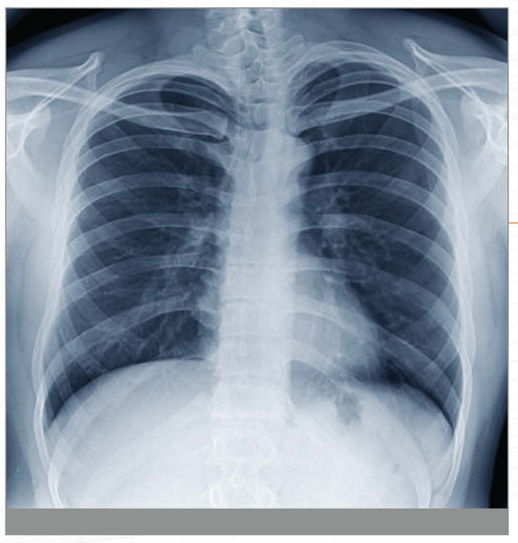

· Chest

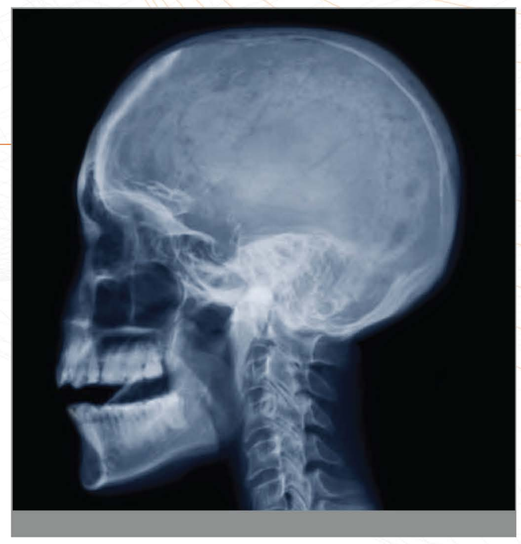

· Head

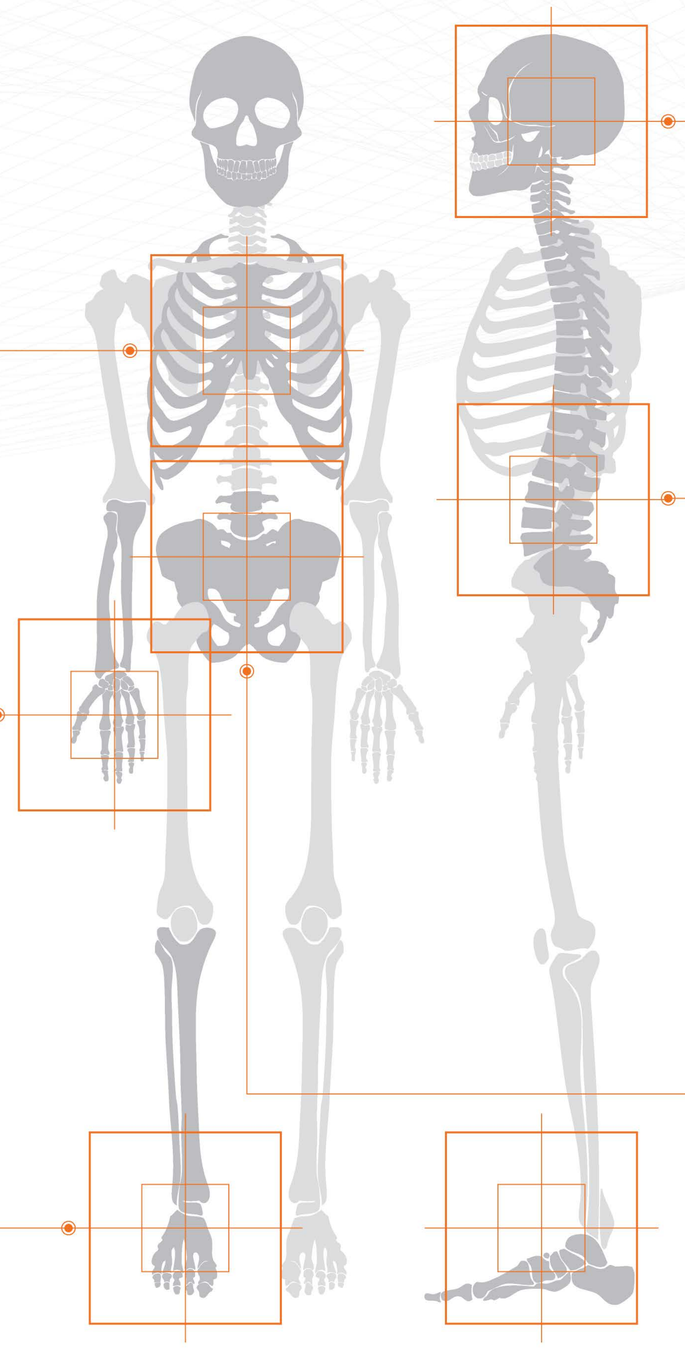

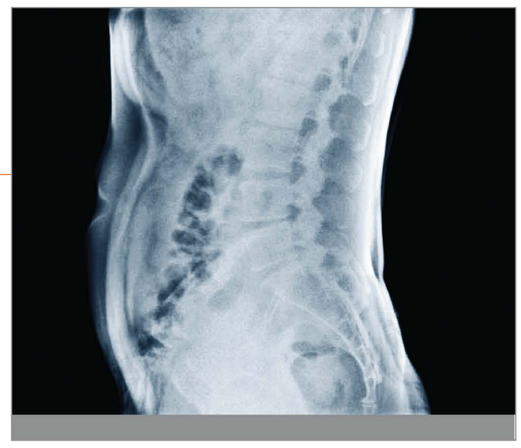

· Extremities

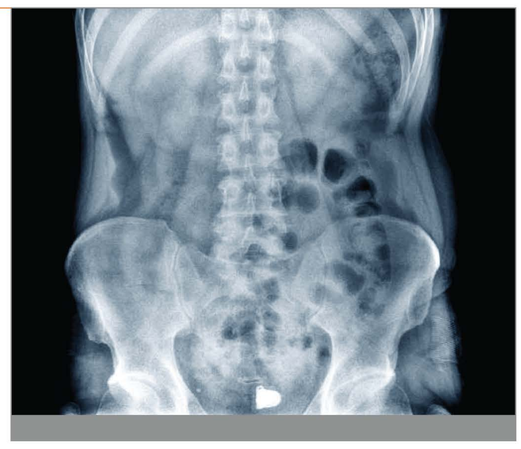

· Abdomen

REMEX Field of Use

· Application field

- Orthopedics
  Outpatient Clinic
- Emergency room
- Operating Room
- Medical Checkup
  General Examination Room
- Respiratory Medicine
  Outpatient Clinic
- Nursing Home
- ICU
  Intensive Care Unit
- NICU
  Neonatal Intensive Care Unit
- NPIR
  Negative Pressure Isolation Room

REMEX-KA6

REMEX Place of use | Target of use

Anytime, Anywhere, Fast X-ray Image Solution

- **Portability :** It can be used anywhere.
- **Quick Access :** It is designed specifically for use when it is not safe or practical to move a patient from his or her bed or when X-ray image for quick diagnosis is needed urgently.

REMEX
Usage Environment

Movable Stand

Radiography Systems

All Places
Emergency room

Anytime, Anywhare

REMEX
Usage Environment

Bed|Mobile

Radiography Systems

Hospital Room
ICU
NPIR
Orthopedics

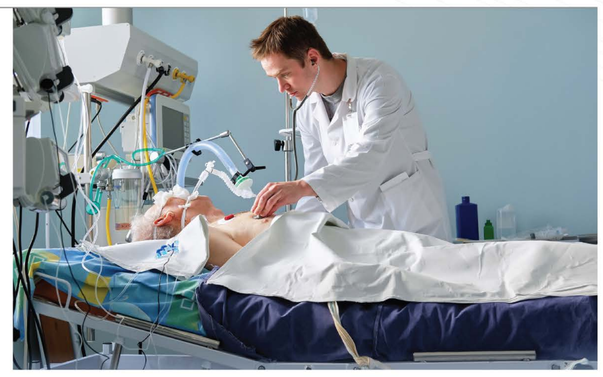

Shooting in bed

Emergency Room
Hospital Room

REMEX
Usage Environment

Station

Radiography Systems

General Examination
Respiratory
Triage

Chest/Head/Spine
Image Solution

Pediatric
Plastic Surgery
Family Medicine

REMEX
Usage Environment

Shielded Kiosk

Radiography Systems

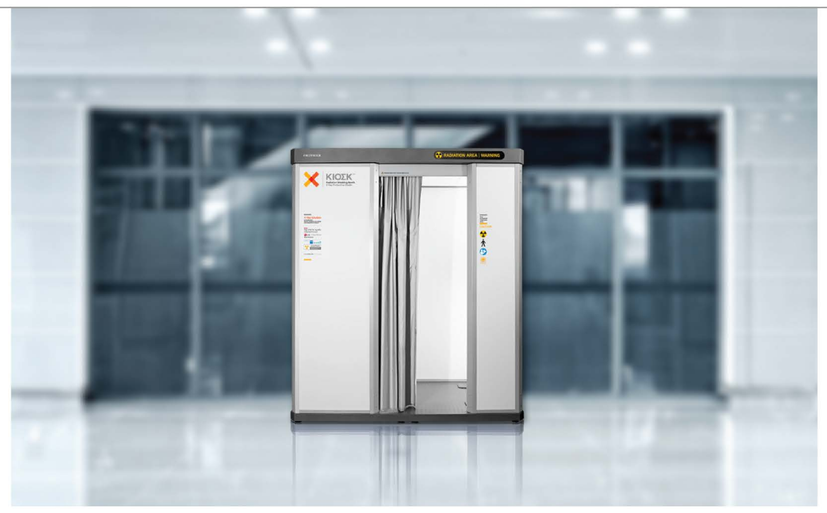

COVID-19

Selective Care Center
Respiratory

Shooting in
Shielded Kiosk

Public Health center

REMEX Specification

Specification

REMEX Specification

Dimension

Top View

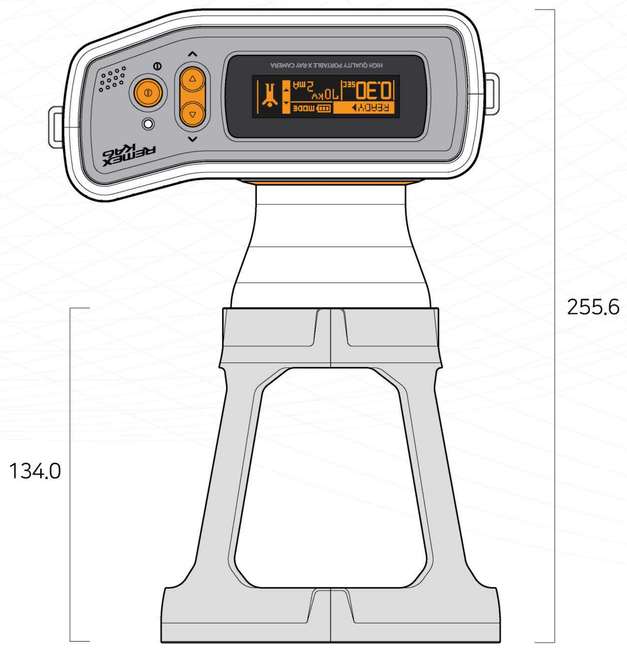

Front View

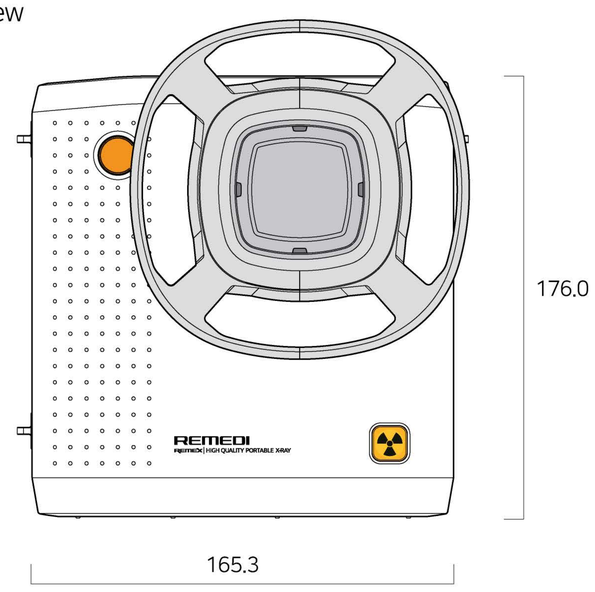

REMEX Specification

Specification of Device

Contents	Values
Tube kV/mA	40~70kV / 2~6mA
Exposure time	0.06 ~ 2.0sec
Focal Spot	0.4mm
Output Power	420W
Size	165.3 x 176.0 x 255.6mm
Weight	2.4kg
Battery	DC 22.2V, 1,800mAh

REMEX-KA6

Collimator OPTION

- Select a collimator suitable for the filming site.
- Use the collimator filter with the desired shape.

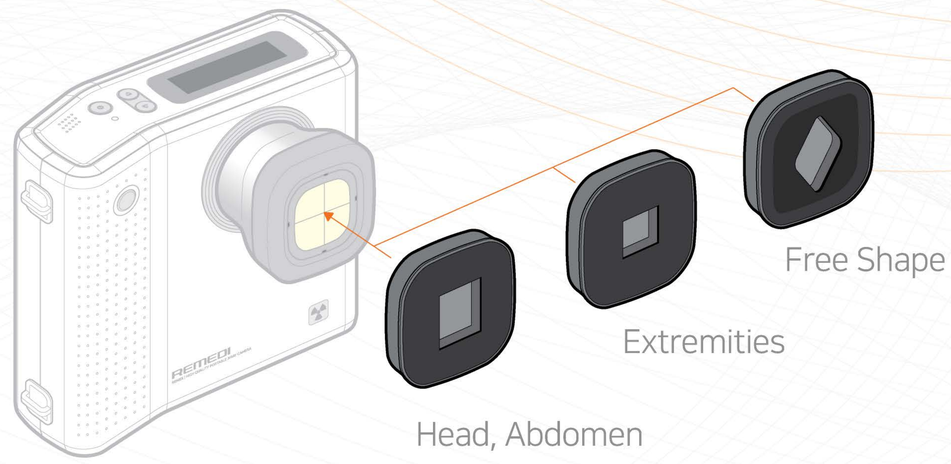

REMEX Extra Features

Application

- Direct Shoot

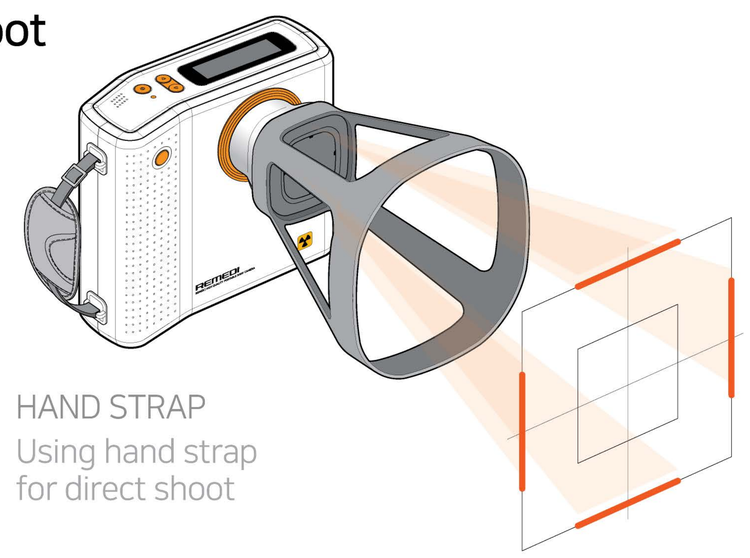

- Remote Switch

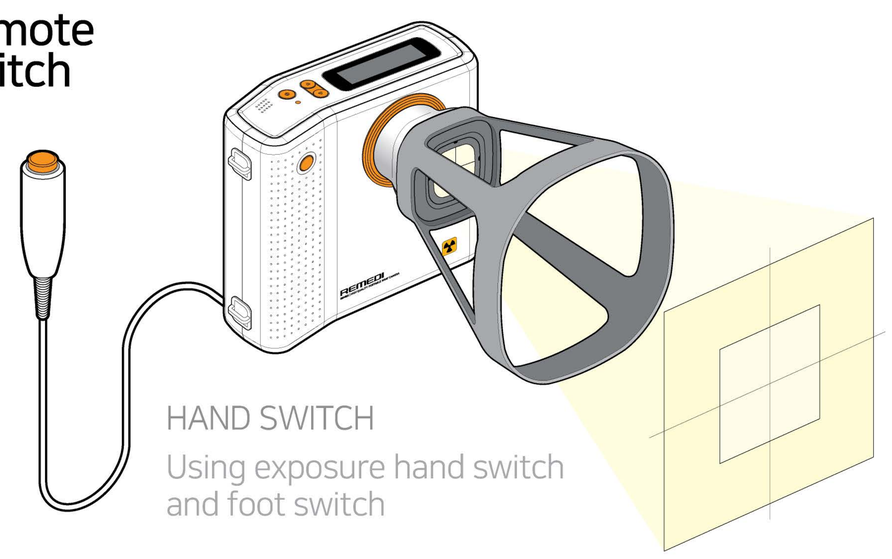

- Wireless Connection

OPTION

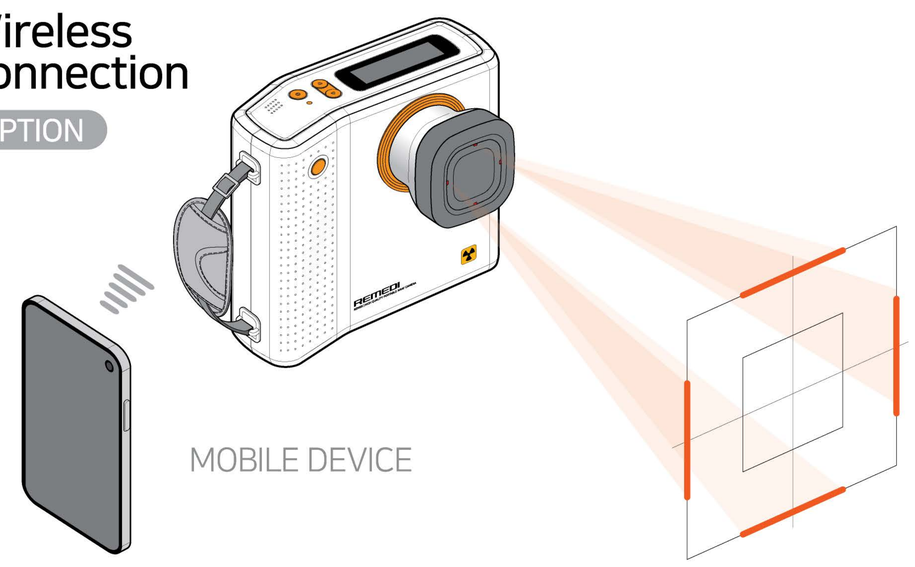

REMEX Place of use | Target of use

Medical Package

REMEDI

LG

CE

FDA

MFDS KOREA

APPROVED

REMEX Medical Package

Portable X-Ray Digital Camera **REMEX KA6 +**

LG Digital X-Ray Detector

A 17HK700G-W [Wired]

B 17HK701G-W [Wired / Wireless]

- **Superior Image Quality for Reliable Diagnosis**

  Highly Sensitive CsI AED Detector with 16bit AD Conversion
  (Data Input & Output)

- **Light and Durable** ▪ **Magnesium & Carbon-fiber Body**

  IP41: Water Resistant & Dustproof

  Solids Level 4 | Protected against objects of size 1mm or larger

  Liquids Level 1 | Protected against dripping liquids, such as blood and bodily fluids

- **Rapid Image Availability Increases Productivity**

  3sec. (Wired)/ 6sec. (Wireless, 802.11 ac)

▪ Dimension

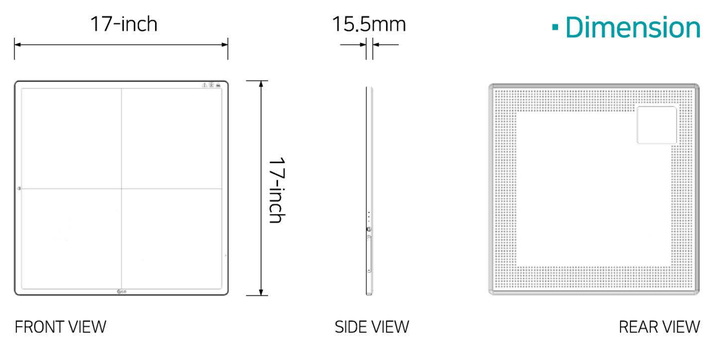

Specification of Device

		A	B
Model Name		17HK700G-W [Wired]	17HK700G-W [Wired / Wireless]
External Dimension / Weight		17 x 17 inch / 3.2kg, 7lb	17 x 17 inch / 3.4kg, 7.5lb (Icld. Battery)
Intended Use		General Radiography	General Radiography
TFT Type		A-si	A-si
Scintillator		CsI	CsI
Pixel Size		140㎛	140㎛
Image Area	X-ray Sensitive Pixel	3072 x 3072 pixels	3072 x 3072 pixels
	X-ray Sensitive Area	430.08 x 430.08 mm	430.08 x 430.08 mm
MTF	MTF @ 0.5lp/mm	(Typ.) 89%	(Typ.) 89%
DQE	DQE @ 0.1lp/mm	(Typ.) 72%	(Typ.) 72%
A/D Conversion		16bit	16bit
Data Output		16bit	16bit
Communication	Type	Wired	Wired
	Wireless	–	IEE802.11a/b/g/n/ac, 2.4GHz / 5GHz
	AED (Auto Exposure Detection)	Support	Support
Cycle Time		8sec.	8sec. (Wired) / 11sec. (Wireless)
Full Image		3sec.	3sec. (Wired) / 6sec. (Wireless)
Durability	Maximum Load Weight	Full (Uniform Load) : 150kg, 331lb Local (Point Load) : 100kg, 220lb	
	Resistance Rating	IP41	IP41
	Sensor Protection Plate	Carbon Fiber Plate	Carbon Fiber Plate
Battery	Operating Time	–	(Typ.) 240 shots / 6.0hrs. (Condition : Interval Time 90sec.)
	Duration in Standby Status	–	(Typ.) 13hrs.
	Charging Time	–	3hrs.

REMEDI

REMEDI Co.,Ltd.

Manufacturing : 2F, 69-14, Sakju-ro, 145beon-gil, Chuncheon-si, Gangwon-do, Korea
Head Office : A-403, Woolim Lion's Valley, 149, Yangpyeong-ro, Yeongdeungpo-gu, Seoul, Korea
Tel : +82-2-6930-5891 Fax : +82-2-6930-5892 E-Mail : sales@remedihc.com

www.remedihc.com